MARADYNE® HIGH PERFORMANCE FANS

PACESETTER SERIES

Model MP109K - 10”

- Lowest profile high performance reversibles on the market
- Sealed motor tested in accordance with DIN EN 60529, dust and water proof to IP68
- Quiet, reversible S-blade design
- All glass-filled nylon construction
- Includes (4) 90° mounting feet
- Includes locking mating pigtail connector and rubber spacers for proper spacing off of heat exchanger
- Recommended wire harnesses* (sold separately)
  - Part No. MFA100 (adjustable thermostat)
  - Part No. MFA102 (185° temperature switch)
  - Part No. MFA103 (195° temperature switch)
- Optional brackets* (sold separately)
  - Part No. MFA104 (metal bracket strips)
  - Part No. MFA105 (aluminum brackets)

TYPICAL PERFORMANCE DATA
MP109K 9˝ LP REVERSIBLE PACESETTER 12V 90W

Static In H_20	Total Flow CFM	13.5 VDC AMPS
0.00	666	4.5
0.10	584	4.5
0.20	467	4.5
0.30	378	4.7
0.40	296	5.2
0.50	222	5.4
0.60	131	5.3
0.70	STALL @ 0.7˝	5.4

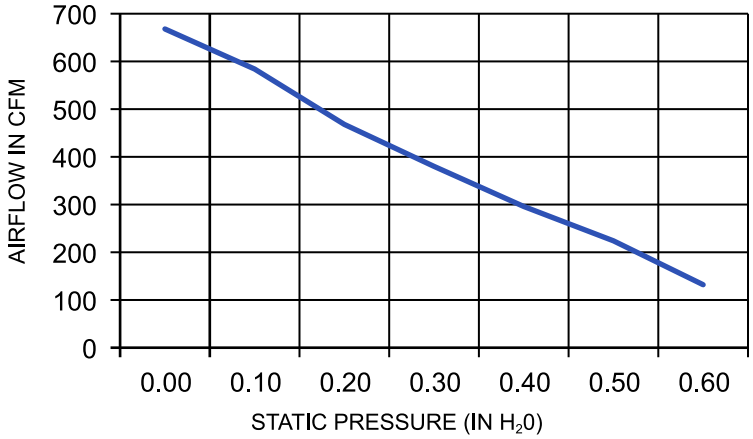

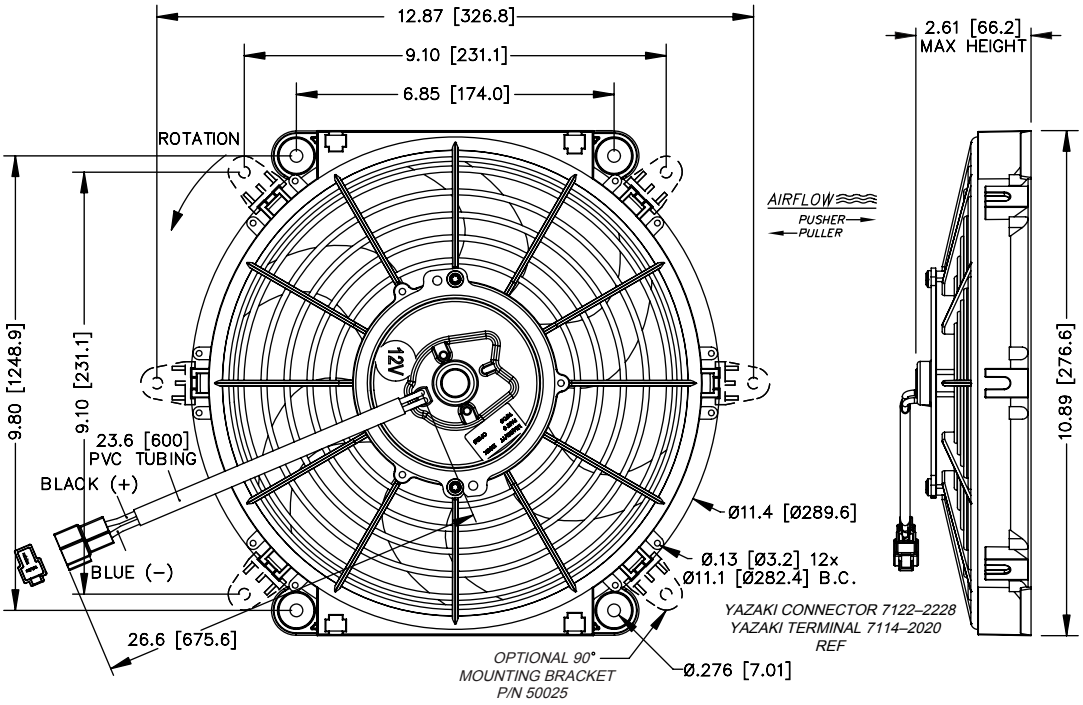

MARADYNE® High Performance Fans
4540 W. 160th Street • Cleveland, Ohio 44135 • Ph: (800) 403-7953 • Fx: (216) 362-6342 • www.maradyneHP.com
©2011 MARADYNE® High Performance Fans - All rights reserved