FR 3001

SLIDE TYPE:	**Full-Extension Concealed Under Mount Drawer Slide**
MOUNTING:	Under Mount

WIDTH:	**n/a**
LOAD CAPACITY:	dynamic up to **34 kg (75 lbs.)**

ECD

MATERIAL:	galvanized steel

SPECIFICATIONS:

- concealed under mount drawer slide with great running qualities
- designed for use with Face Frame constructed cabinets
- very smooth soft close device to prevent slamming
- see FR 3002 for Euro frame-less cabinet application
- designed for four sided drawers, notching not required
- 16mm thick drawer walls

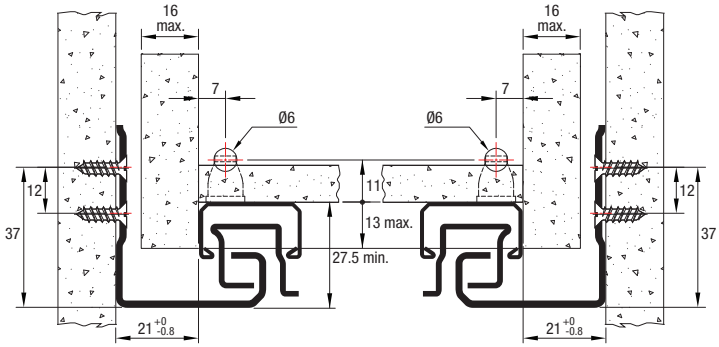

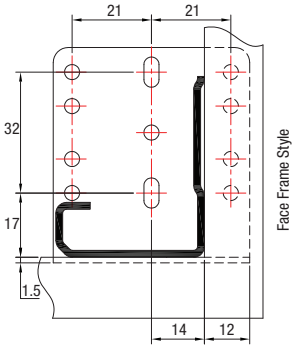

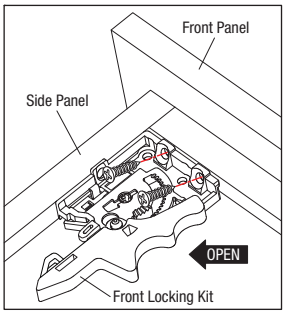

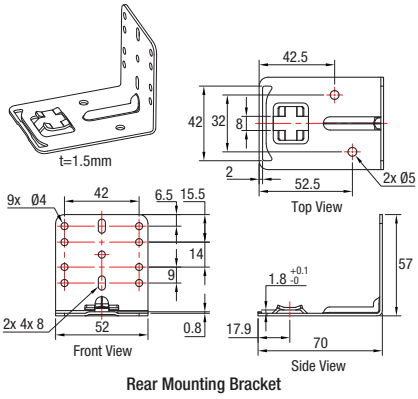

Rear Mounting Bracket

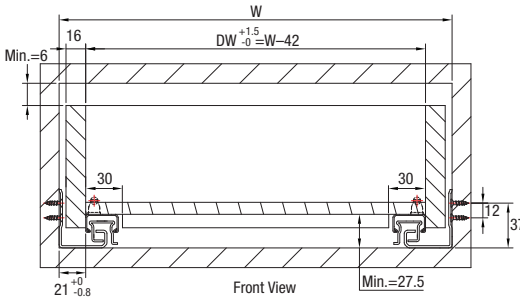

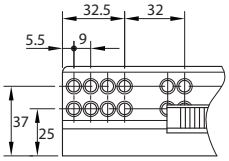

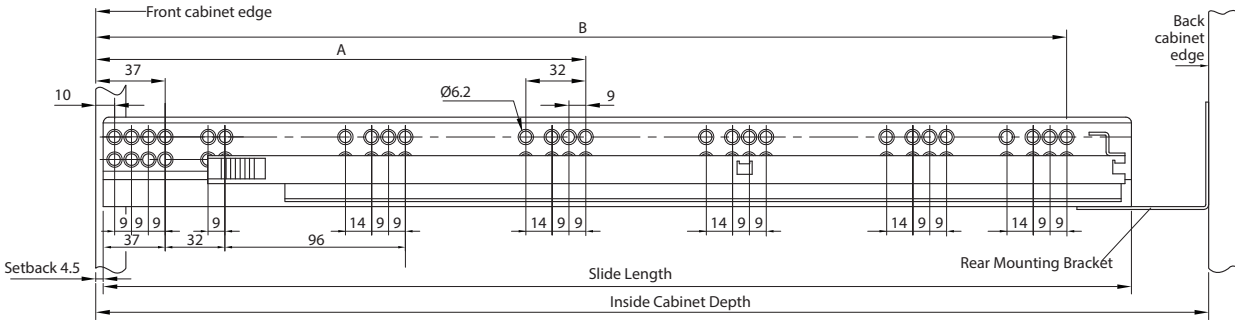

Slide Length mm	Slide Length in	Travel mm	Travel in	Drawer Length mm	Drawer Length in	A mm	A in	B mm	B in	Inside Cabinet Depth w/rear bracket mm	Inside Cabinet Depth w/rear bracket in	Weight per pair kg	Weight per pair lbs	Order No. galvanized steel
317	*12.48*	290	*11.42*	305	*12.01*	261	*10.28*			326-358	*12.84-14.10*	*	*	**300019**
394	*15.51*	364	*14.33*	381	*15.00*	261	*10.28*			403-435	*15.87-17.13*	*	*	**300020**
470	*18.50*	440	*17.32*	457	*17.99*	261	*10.28*	453	*17.84*	479-511	*18.86-20.12*	*	*	**300021**
546	*21.50*	516	*20.31*	533	*20.98*	261	*10.28*	517	*20.35*	555-587	*21.85-23.11*	*	*	**300022**

Packing Unit: **10 pair per box (including rear mounting brackets and drawer locking device)** *** on request**

Fulterer